Impulse Aerospace Rugged-Rockets™

Model: **Six-Pack**
Propulsion: 24mm (D-G Engines)
Document: Assembly Guide
Version: 1.1

10/96 - /.../sixpack/assembly.pm6

Impulse Aerospace certifies that it has exercised reasonable care in the design and manufacture of its products. However, as we cannot control the use of our products once sold, we cannot assume any responsibility for product usage.

Impulse Aerospace shall not be held responsible for any personal injury or property damage resulting from the use of our product. The buyer assumes all risks and liabilities arising from the use of our product and uses our product on these conditions. Impulse Aerospace makes no warranty regarding our products except for replacement or repair as outlined in the Warranty Information section. If any of these terms are unacceptable, return the unassembled kit to Impulse Aerospace for a prompt refund.

Copyright © 1997 Impulse Aerospace, Inc. All Rights Reserved
Rugged-Rockets and Impulse Aerospace are trademarks of Impulse Aerospace, Inc.

Introduction

Congratulations on your purchase of a Rugged-Rocket kit from Impulse Aerospace. Unlike other rocket kits, your Rugged-Rocket can give you hundreds of flights, for years of enjoyment. The phenolic and fiberglass construction is water resistant, and extremely tough.

Your Rugged-Rocket is different from most other rockets in the same power class, both in assembly and in performance. Be sure to read the instruction manual thoroughly before you get started.

Warranty Information

Impulse Aerospace warrants your Rugged-Rocket kit to be free from defects in materials or workmanship for a period of one year after purchase. We will replace or repair (our option) any kit returned to us, free of charge.

If for any reason you are dissatisfied with this product, please let us know. We can't fix what we can't see! We believe in our products and stand behind them.

Our primary goal is for you to be satisfied with your purchase.

How to Reach Impulse Aerospace

You can call toll-free at 1-800-568-2785. Our office hours are 9-5 Monday through Friday, Pacific Time.

Impulse Aerospace, Inc.
22833 Bothell Way SE Suite 1148
Bothell, WA 98021
Internet Address: **custsvcs@impulseaero.com**
Web Site: **http://www.impulseaero.com/**

Kit Contents

Your kit should contain the following parts:
(See drawing for part identification)

- 1 Booster Tube (Phenolic)
- 1 Nose Cone (ABS Plastic)
- 1 Nose Cone Cross-bar
- 6 Fin-Tubes (Phenolic)
- 1 Motor Mount Tube (Cardboard)
- 1 Shock Line (Kevlar)
- 1 Parachute Protector (Nomex Cloth)
- 1 Parachute (Nylon or Silk)
- 3 Parachute Shroud Lines (Kevlar)
- 1 Launch Lug (Plastic)
- 6 Split Rings (Steel)
- 1 Decal Sheet
- 1 Assembly Guide

If you are missing any components, contact Impulse (see Warranty Info) for prompt replacement.

Required Tools & Materials

- ❑ Masking Tape
- ❑ Sandpaper (Fine or 300 grit)
- ❑ 5-minute and 20-minute (2-Ton) epoxy
- ❑ Plastic Model Cement (solvent type)
- ❑ Spray Paint & Primer
- ❑ X-acto or other hobby knife
- ❑ Scissors
- ❑ Newspapers

Six-Pack As

Fin Installation

Use sandpaper to rough up the aft end of the booster tube where the fin-tubes attach, then rough a strip along the long side of the fin-tubes. Apply epoxy on the long side of the fin-tube and set it in place on the body tube. Lay on a flat surface to set, making sure the two tubes don't roll away from one another. Proceed around the body tube until all six fin-tubes are attached. They should be touching one another.

Motor Mount Tube

Apply epoxy to inside of booster tube. Holding knot on shock line, slide motor mount tube into booster, aft end flush to end of booster. Pull the shock line taut, bringing knot tight against aft end of rocket. Set aside to dry.

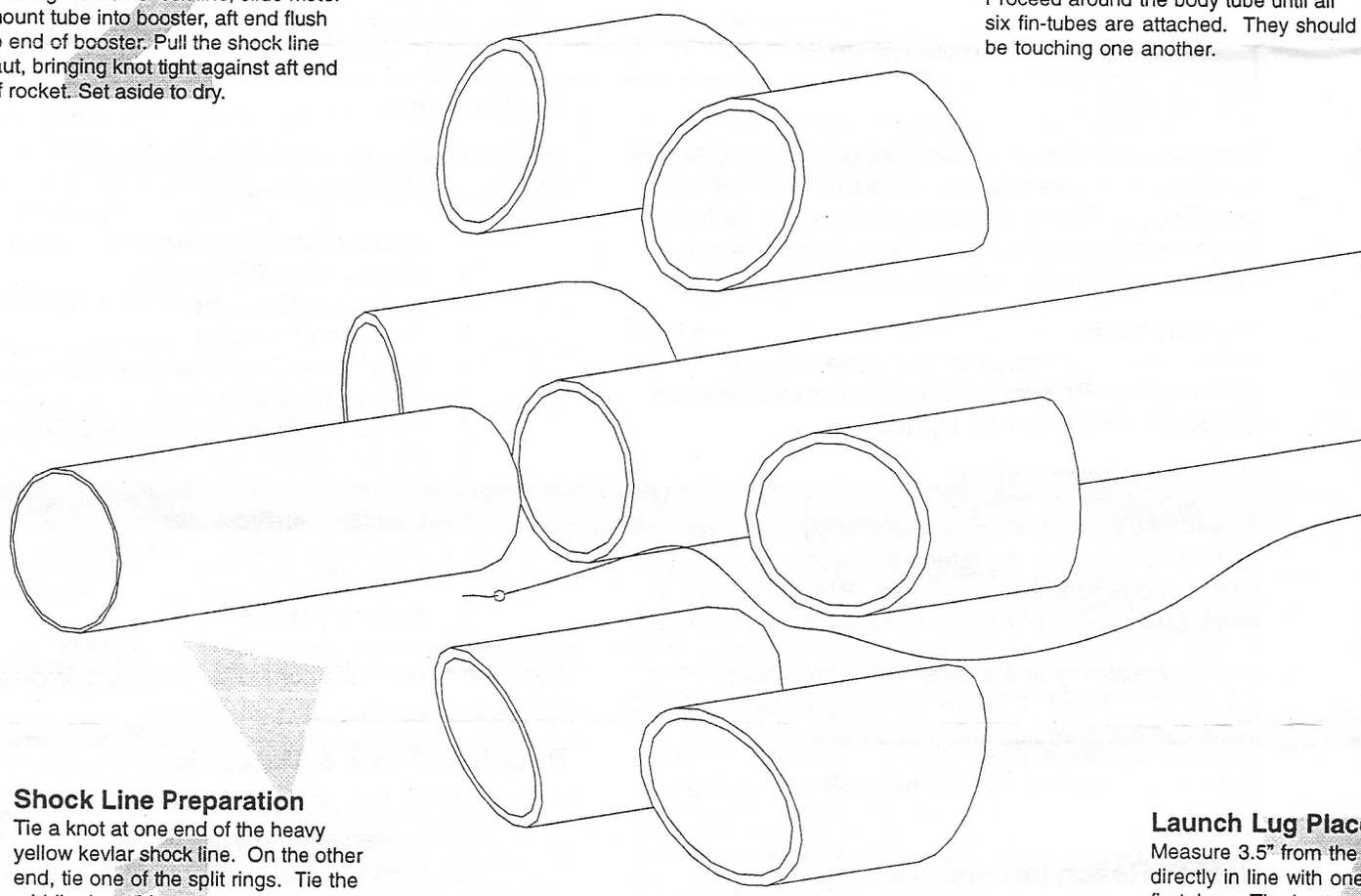

Shock Line Preparation

Tie a knot at one end of the heavy yellow kevlar shock line. On the other end, tie one of the split rings. Tie the middle ring 6" from that end, then tie the third ring 6" from the middle ring. Put the shock line assembly into the booster tube, with the knot hanging out the rear. You may also wish to use the alternate shock line mount, described on the enclosed sheet.

Launch Lug Mounting

Epoxy the launch lug in place, with its rear edge on the mark. Sight down the booster tube to insure that it is on straight. Once it's dry, apply epoxy fillets to either side of the lug.

Launch Lug Plac

Measure 3.5" from the
directly in line with one
fin-tubes. The best wa
lug with the joint is to i
between the fin-tubes,
to place the launch lug.
place, then remove the

© Copyright 1997 Impulse Aerospace, Inc.

sembly Guide

Nose Cone

Insert the short length of white plastic through the hole in the nose cone shoulder. Use some solvent-type model plastic cement to set the bar in place.

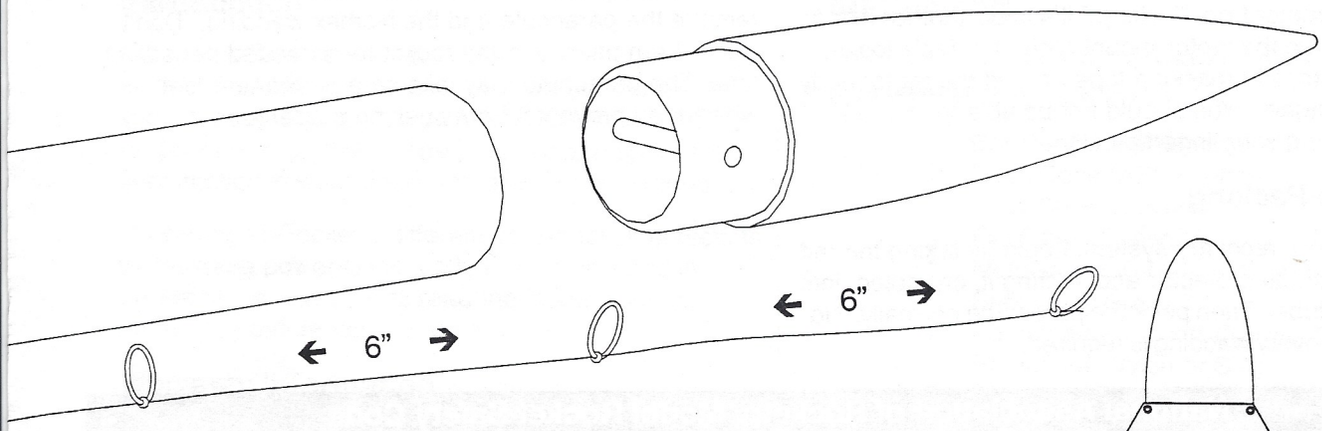

Parachute Protector Installation

Tie the last split ring onto the nomex parachute protector with one of the short lengths of kevlar. The Parachute Protector attaches to the lowest split ring on the shock-line.

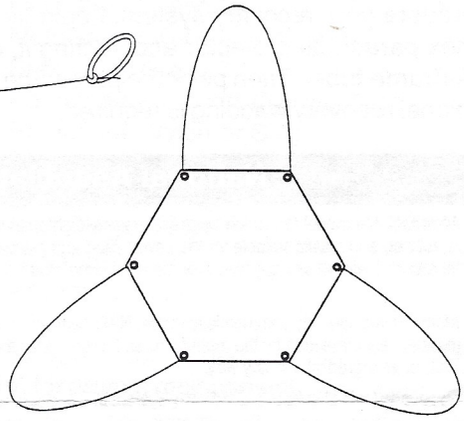

ment

ack of the rocket, of the joints between to align the launch sert a launch rod hen use it as a guide Tape the lug in rod.

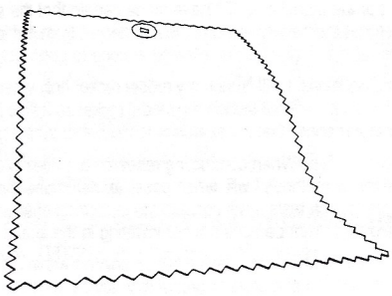

Parachute Assembly

Tie the end of each shroud line through an eyelet on the parachute, making three loops. Thread the shroud lines through one of the split rings, then bring the parachute through the resulting loop. Make sure all the shrouds are even. The Parachute attaches to the endmost shock-line ring.

Impulse Aerospace, Inc.

Rugged Rocket Assembly Drawing
"Six-Pack"

Design: Kevin Reed & Bill Maness

Motor Selection

Use the table below to help select a motor for your flight. These suggested field sizes are at least as large as the NAR safety code requirements for the motor size.

Motor	Est. Altitude	Field Size
Estes D-12-7	765'	500'
Aerotech E-28-8	2,770	1,000'
Aerotech F-72-10	2,638'	1,000'
Aerotech G-55-10	3,450'	1,000'

Motor Installation

For single-use motors, you'll have to make a "thrust ring" at the aft end of the motor, using 1/4" masking tape. Wrap the tape around the motor to build up a ring about 1/16" thick (about 10 wraps). This ring transmits the thrust of the motor into the airframe. Reloadable motors already have a thrust ring integral to their design.

To keep the motor from "kicking," it's important for it to fit very snugly into the motor mount tube. If it feels loose, wrap a few strips of masking tape around the motor body and insert it again. You should not be able to remove the motor using your fingertips alone.

Parachute Packing

To prepare your recovery system, begin by taking the red Nomex parachute protector and stuffing it, crumpled, into the airframe tube. Then pack the parachute normally. No additional recovery wadding is required.

Flight

Model rocketry is an activity that has been enjoyed safely for more than thirty years. What has made it so safe for so long is adherence to a safety code. Follow the launch procedure described in the NAR Safety code below.

Spent Motor Removal

If you can't remove the motor by grasping the aft thrust ring and pulling, there is another, easier way to remove it. Get a dowel about four inches longer than your booster section and about 3/4" in diameter. Make sure that the parachute, wadding and shock-line is out of the way, then insert the dowel into the booster until it's pressing against the top of the motor. Flip the booster over, placing the dowel on a firm surface, then pull the booster down over the dowel, ejecting the spent motor.

Cleanup & Storage

When storing your rocket, it's recommended that you remove the parachute and the Nomex wadding. Don't leave them packed in the rocket for extended periods of time. The parachute may take on a permanent "set" which may prevent it from opening properly.

National Association of Rocketry Model Rocket Safety Code

1. *Materials.* My model rocket will be made of lightweight materials such as paper, wood, rubber, and plastic suitable for the power used and the performance of my model rocket. I will not use any metal for the nose cone, body, or fins of a model rocket.

2. *Motors.* I will use only commercially-made, NAR-certified model rocket motors in the manner recommended by the manufacturer. I will not alter the model rocket motor, its parts, or its ingredients in any way.

3. *Recovery.* I will always use a recovery system in my model rocket that will return it safely to the ground so it may be flown again. I will use only flame-resistant recovery wadding if wadding is required by the design of my model rocket.

4. *Weight and Power Limits.* My model rocket will weigh no more than 1,500 grams (53 ounces) at lift-off and its rocket motors will produce no more than 320 Newton-seconds (71.9 pound-seconds) of total impulse. My model rocket will weigh no more than the motor manufacturer's recommended maximum lift-off weight for the motors used, or I will use motors recommended by the manufacturer for my model rocket.

5. *Stability.* I will check the stability of my model rocket before its first flight, except when launching a model rocket of already proven stability.

6. *Payloads.* My model rocket will never carry live animals (except insects) or a payload that is intended to be flammable, explosive, or harmful.

7. *Launch Site.* I will launch my model rocket outdoors in a cleared area, free of tall trees, power lines, buildings, and dry brush and grass. My launch area will be at least as large as that recommended in the accompanying table. (*See Predicted Performance Table.*)

8. *Launcher.* I will launch my model rocket from a stable launch device that provides rigid guidance until the model rocket has reached a speed adequate to ensure a safe flight path. To prevent accidental eye injury, I will always place the launcher so the end of the rod is above eye level or I will cap the end of the rod when approaching it. I will cap or disassemble my launch rod when not in use and I will never store it in an upright position. My launcher will have a jet deflector device to prevent the motor exhaust from hitting the ground directly. I will always clear the area around my launch device of brown grass, dry weeds, or other easy-to-burn materials.

9. *Ignition System.* The system I use to launch my model rocket will be remotely controlled and electrically operated. It will contain a launching switch that will return to "off" when released. The system will contain a removable safety interlock in series with the launch switch. All persons will remain at least 15 feet from the model rocket when I am igniting model rocket motors totaling 30 Newton-seconds or less of total impulse and at least 20 feet from the model rocket when I am igniting model rocket motors totaling more than 30 Newton-seconds of total impulse. I will use only electrical igniters recommended by the motor manufacturer that will ignite model rocket motors within one second of actuation of the launching switch.

10. *Launch Safety.* I will ensure that people in the launch area are aware of the pending model rocket launch and can see the model rocket's lift-off before I begin my audible five-second countdown. I will not launch my model rocket so its flight path will carry it against a target. If my model rocket suffers a misfire, I will not allow anyone to approach it or the launcher until I have made certain that the safety interlock has been removed or that the battery has been disconnected from the ignition system. I will wait one minute after a misfire before allowing anyone to approach the launcher.

11. *Flying Conditions.* I will launch my model rocket only when the wind is less than 20 miles per hour. I will not launch my model rocket so it flies into clouds, near aircraft in flight, or in a manner that is hazardous to people or property.

12. *Pre-Launch Test.* When conducting research activities with unproven model rocket designs or methods I will, when possible, determine the reliability of my model rocket by pre-launch tests. I will conduct the launching of an unproven design in complete isolation from persons not participating in the actual launching.

13. *Launch Angle.* My launch device will be pointed within 30 degrees of vertical. I will never use model rocket motors to propel any device horizontally.

14. *Recovery Hazards.* If a model rocket becomes entangled in a power line or other dangerous place, I will not attempt to retrieve it.